GT-ASD652
AHD High Definition IR Middle Speed Dome

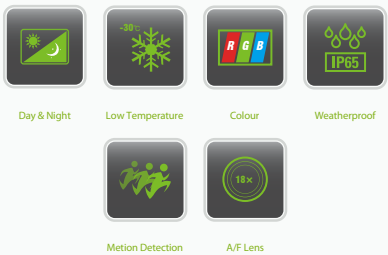

Features

- High performance processor, 18X optical zoom and 16X digital zoom
- Aptina 1/3"CMOS sensor, 1280*960 resolution
- Support transmission distance up to 500 meters
- Support OSD and 3D noise reduction function
- Can work in temperature from -40degree to 60 degree

Product dimension figure

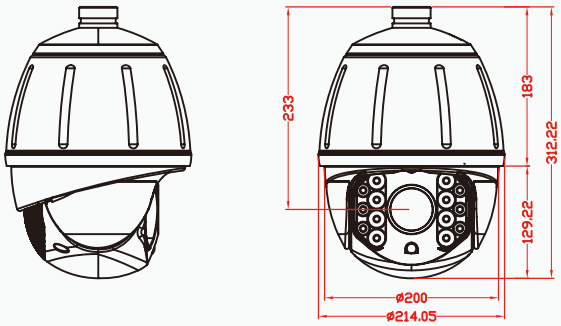

Technical Specifications

Model	GT-ASD652
Camera	
Image Sensor	1/3" CMOS
Image Resolution	1280*960
Video Standard	PAL or NTSC
Zoom	18×optical zoom and 16×digital zoom
Frame Per Second (FPS)	1280H x 720V/25fps /1280H x 720V/30fps 1280H x 960V/25fps /1280H x 960V/30fps
3D Noise Reduction	YES
Gain Control	Auto / Manual
Backlight Compensation	YES
Day & Night Mode	Auto IR-CUT
Signal Noise Rate (SNR)	≥50dB
White Balance	Auto/Manual
Dynamic range	83.5dB
Minimum Illumination	Color: 0.5Lux; B&W: .0.05Lux; IR On: 0 Lux
Lens	
Focus Mode	Auto/ Semi-auto/Manual
Lens	4.7mm -84.6mm
Iris	F1.6~F3.5
Field Angle	D:WIDE 64.1º±5% TELE 3.6º±5% H:WIDE 51.85º±5% TELE 2.89º±5% V:WIDE 39.31º±5% TELE 2.19º±5%
Pan & Tilt	
Pan Range	360°
Tilt Range	93°
Pan Speed	60°/s
Tilt Speed	45°/s
Number of Preset	220
Number of Patrol	3
Guard Mode	360 degree/2 presets/Patrol guard
Preset dwell time	1~ 60S Editable
The maximum transmission distance	Up to 500M
General	
Infrared Lamp	8* ∮ 20 and 6* ∮ 16
Power Supply	DC12V/3A
Power Consumption	<25W
Dynamic range	83.5dB
Temperature control	Auto Control
Working Conditions	Indoor(0ºC～+40ºC); Outdoor(-40℃～+60℃)
Dimension	31*31*43CM
Weight	Net Weight: 3.6KG; Gross Weight: 5.0KGS
Mounting Type	Ceiling /Wall Mounting

© Copyright 2014. ZKTeco Inc. ZKTeco Logo is a registered trademark of ZKTeco or a related company. All other product and company names mentioned are used for identification purposes only and may be the trademarks of their respective owners. All specifications are subject to change without notice. All rights reserved.